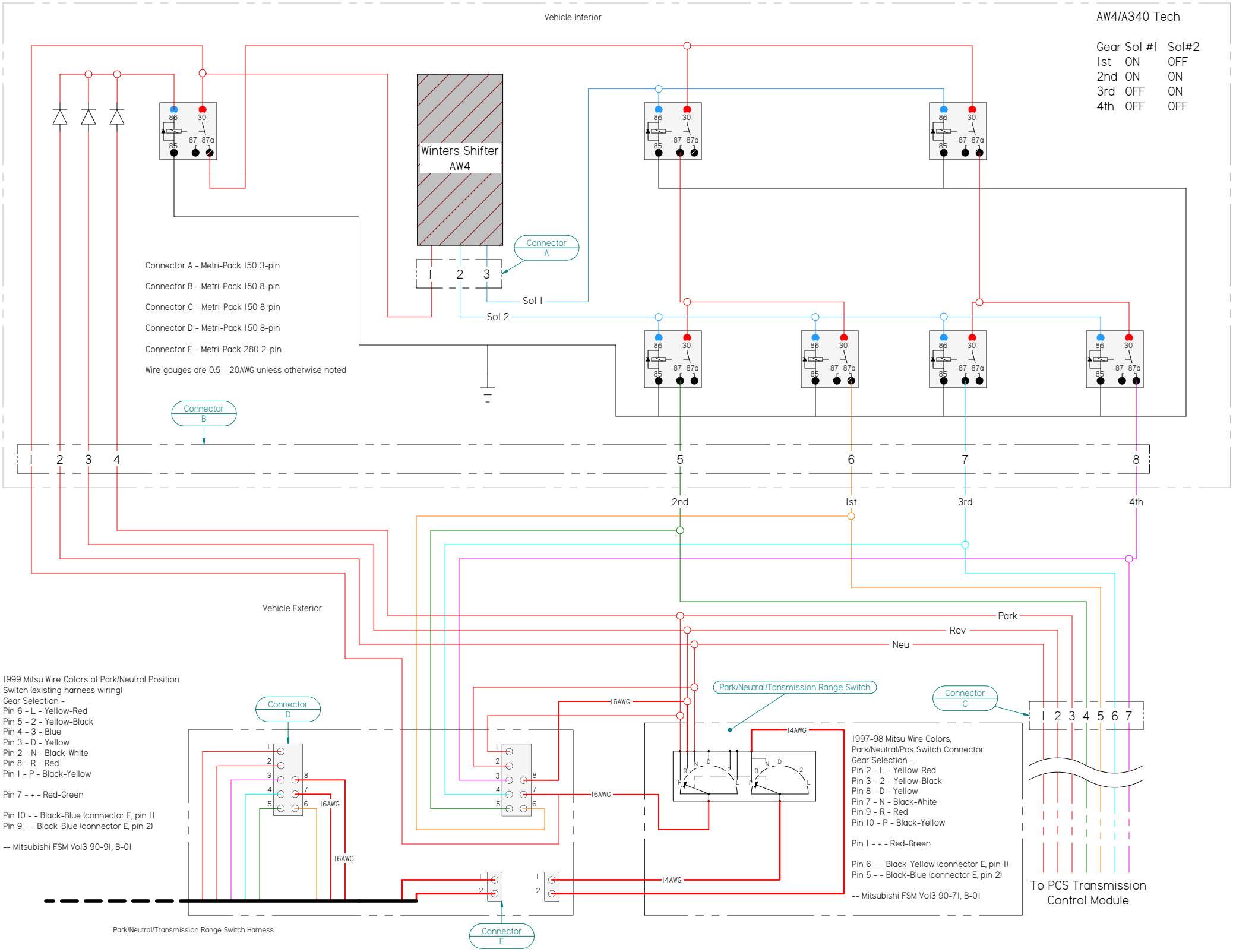
Vehicle Interior
AW4/A340 Tech
Gear Sol #1 Sol#2
1st ON OFF
2nd ON ON
3rd OFF ON
4th OFF OFF
Winters Shifter AW4
Connector A
1 2 3
Sol 1
Sol 2
Connector A - Metri-Pack 150 3-pin
Connector B - Metri-Pack 150 8-pin
Connector C - Metri-Pack 150 8-pin
Connector D - Metri-Pack 150 8-pin
Connector E - Metri-Pack 280 2-pin
Wire gauges are 0.5 - 20AWG unless otherwise noted
Connector B
1 2 3 4 5 6 7 8
2nd
1st
3rd
4th
Vehicle Exterior
Park
Rev
Neu
1999 Mitsu Wire Colors at Park/Neutral Position Switch (existing harness wiring)
Gear Selection -
Pin 6 - L - Yellow-Red
Pin 5 - 2 - Yellow-Black
Pin 4 - 3 - Blue
Pin 3 - D - Yellow
Pin 2 - N - Black-White
Pin 8 - R - Red
Pin 1 - P - Black-Yellow
Pin 7 - + - Red-Green
Pin 10 - - Black-Blue (connector E, pin 1)
Pin 9 - - Black-Blue (connector E, pin 2)
-- Mitsubishi FSM Vol3 90-91, B-01
Connector D
16AWG
Park/Neutral/Tansmission Range Switch
14AWG
Connector C
1997-98 Mitsu Wire Colors, Park/Neutral/Pos Switch Connector
Gear Selection -
Pin 2 - L - Yellow-Red
Pin 3 - 2 - Yellow-Black
Pin 8 - D - Yellow
Pin 7 - N - Black-White
Pin 9 - R - Red
Pin 10 - P - Black-Yellow
Pin 1 - + - Red-Green
Pin 6 - - Black-Yellow (connector E, pin 1)
Pin 5 - - Black-Blue (connector E, pin 2)
-- Mitsubishi FSM Vol3 90-71, B-01
To PCS Transmission Control Module
Park/Neutral/Transmission Range Switch Harness
Connector E